This document presents a brief description of fastener stress/strain & elongation measurement using ultrasonics. For more details on www.ibj-technology.



Photo: Wikimedia “Hover dam.jpg”

HYDROPOWER DAM STRESS / STRAIN & REINFORCEMENT MEASUREMENT USING ULTRASONICS

System IBJ Technology

© Copyright 2015
IBJ Technology

Basics

Physical fundamentals of the acousto-elastical measurement [1]:
Contrary to the stress analysis of construction units, where generally the change of speed of the transversals and longitudinal waves is seized and evaluated, in situ stress measurement regarded here uses only the change of the speed of the longitudinal waves within the thickness of a measuring body. Past direct measurements of the speed of sound in rocks or concrete are unsuitable for regulations of the stress ratios. Rock anisotropies, tears etc. affect saliently these measurements. Particularly different contents of pore waters make such measurements with difficulty comparable and unsuitable for a monitoring [Huang et al. 2001]. The instrumentation influence of changing porosities and/or dampness contents can lie the far over stress-dependent portion of the measuring effect.

The measured variable is in all applications the running time of an ultrasonic impulse in a homogeneous measuring body, for example made of metal. The force application takes place on the measuring bolt and/or on the metal plate and concomitantly via the PVDF foil. The force application changes also the mechanical stress in the measuring body. Since this mechanical stress is not directly measurable, one must select either the detour over a mechanical size or over further directly dependent variables. The ultrasonic speed is like that one, from the mechanical stress, dependent variable. However still further factors of influence exist:

- For the measuring instrument practically as factors of influence (material constants), which can be accepted constantly: the modulus of elasticity , the density and the Poisson number ν.
- The most important variable measured variable, the temperature, which over other material-specific parameters the speed of sound directly (thermal dependence on ***c***) or indirectly affects (thermal coefficient of expansion α).

Contrary to liquids and gases the speed of sound ***c*** in the solid body hangs of the modulus of elasticity E off. In addition, there is here besides a dependence on the density ρ the solid body. For longitudinal waves in a long staff with a diameter smaller than the wavelength, under neglect, is valid for the lateral contraction:

$$c_{Fk,l} = \sqrt{\frac{E}{\rho}} \qquad (1)$$

For transverse waves arises:

$$c_{Fk,t} = \sqrt{\frac{G}{\rho}} \qquad (2)$$

with the shear modulus G.

For the homogeneous and isotropic solids regarded here simplified without roll-direction-controlled constants are regarded here. Thus the speed of sound does not depend on the direction of propagation. The speed of sound then additionally still depends on the transverse contraction ratio (Poisson number) ν:

$$c_l = \sqrt{\frac{E(1-\nu)}{\rho(1+\nu)(1-2\nu)}} \qquad (3)$$

this is valid for a longitudinal wave. For a transverse wave arises:

$$c_t = \sqrt{\frac{E}{2\rho(1+\nu)}} \qquad (4)$$

Ultrasonic waves have a frequency range of over 20 kHz. The transverse contraction ratio one calls also Poisson number and is defined as follows:

$$\nu = -\frac{\Delta d/d}{\Delta l/l} \qquad (5)$$

with the change of diameter Δd and length variation Δl the body.

As measured variable for an embedded measuring body no mechanical measured variable is available. Interference-freely and without influence of the item under test however the running time is measurable, which (in the broadest sense) is in reverse proportional to the mechanical stress in the measuring body.

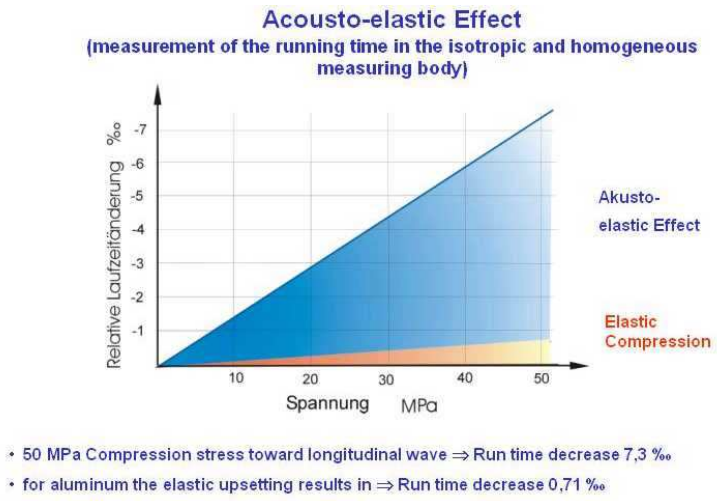

Fig.1:The Acousto-elastical Effect

The acousto-elastic effect describes the influence of tensile stress on the speeds of ultrasonic waves in the measuring body. The out spreading speeds is described thereby in the following form, in that the material density, which elasticity and shear modulus (flexible constant of IITH order) as well as the flexible constants of IIITH order as material-specific characteristic values and the three components of the orthogonality pressure tensor and/or the three principal stresses as condition parameters of the measuring body are received.

The running time of the ultrasonic waves, which spread within the measuring body, is measured highly reolution with a TDC circuit.

The adaptation of the ultrasonic transducers into or to metallic bodies is easily possible. The acousto-elastic effect can take place both via the measurement of the longitudinal wave and via the measurement of the transversals wave or via evaluation of the change of both waves. It is valid the reversibitity between expansion and upsetting.

The **Hook law** is valid only for the elastic range.

σ (tension) **= E** (elastic module) *** ε** (stretch)

The ultrasonic waveguide of metal fulfill the Hook law. The relative change of the wave velocity by the tension effect is very small. The change of speed of the ultrasonic waves is an approximately linear function. The change of the speed of sound depends apart from the dependence on the influencing mechanical stress also

on the temperature. In practice the temperature equalizing places itself between measuring bodies and surrounding building
sufficiently fast.

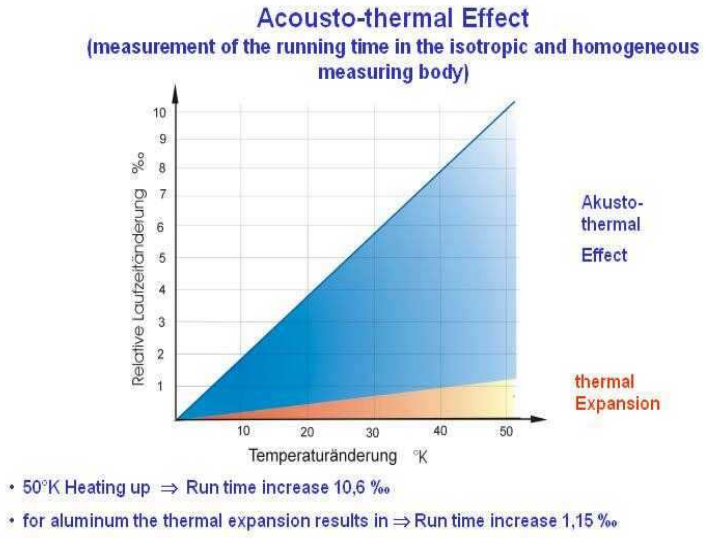

Fig. 2: Acousto-thermal effect

Larger variations in temperature are concrete in the stationary installation in the mountains or in tunnels, in the annular space between Tübbing and mountains not to expect. With applications, where on a changing ambient temperature is to be counted, temperature measurements are capable of being implemented for compensation conceivably and easily in the measuring body. By the elastic behavior of the measuring section between the ultrasonic sensors also the length of the measuring section is changed.

The change of the speed of sound is very small in relation to the absolute speed of sound. The direct instrumentation evaluation by a usual measurement running time is too inaccurate, since the dissolution is not sufficient here. A direct frequency counting over microprocessors separates, there the cycle time (computing clock) around the factor 1000 to 10000 is larger than the demanded usable dissolution. Metal plates of few centimeters result in running times of the ultrasonic impulse smaller 10 µs. If loads are to be measured by only some MPa, and/or Nmm^{-2}, the dissolution must be below 10 ns.

For the measurement of small changes (10 kPa) and smaller the increase of the dissolution must take place via calculation of average values of many single measured values.

The temperature is to be determined if possible with high resolution. The changes of temperature in the rock and/or concrete take place in practice slowly and are not time-critical in relation to the measurement of flying time. In principle nearly each highly soluble temperature measurement is suitable.

A standard deviation of the temperature of 0,001 °K causes an additional deviation of the tension from 1,31 kPa. Technically is executable with different electronic construction units and by the principle different temperature sensors. Temperature measurement principle:

- Pt-Resistors
  Evaluation in the TDC circuit; (0,002°C)
- Digital temperature sensors
  - 1-Wire-Interface
    Dallas DS18S20, resolution: 12 Bit, (0,0625°C)
  - 2-Wire-Interface
    National Semiconductor LM76CHM, resolution: 14 Bit
  - SPI-Interface
    Analog Devices ADT7310, resolution: 16-bit; (0.0078 °C)

Advantage of the digital temperature sensors: Clear addressing already in the sensor contain.

Own measurements were accomplished by the author at inspection pieces from aluminum with a thickness of 10 mm. Became in the temperature range of - 25°C to +75°C the following dependence determines:

linear regression:
regression curve: **Y = a + b*x (5)**

wih a = = 3079,314922
and b = = 0,886518
dimension X values = °C
dimension Y values = ns
number of measured values = 65
correlation coeffizient R = 0,998204
coefficient of determination R^2 = 0,996412

exponential regression:
regression curve: **Y = a * exp (b*x) (6)**

with a = = 3079,341260
and b = = 0,000285
correlation coeffizient R = 0,998401
coefficient of determination R^2 = 0,996805

For practical application for the correction of the running time the use of the linear involution is sufficiently exact.

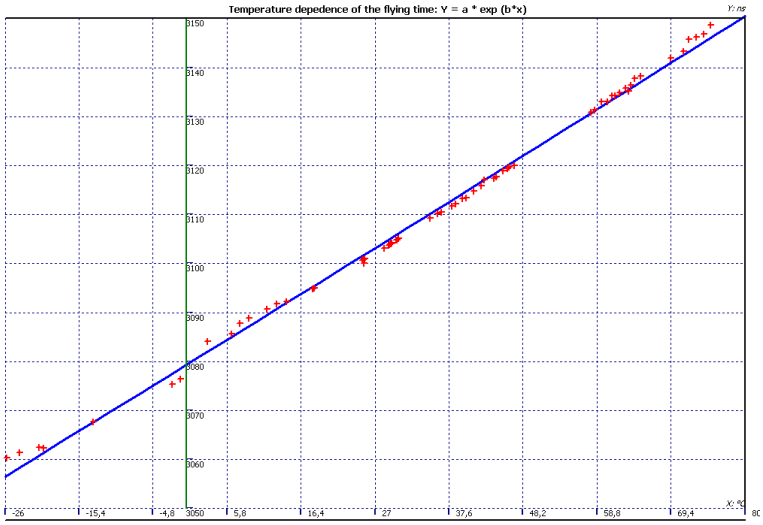

Fig. 4: Run time change as function of the temperature

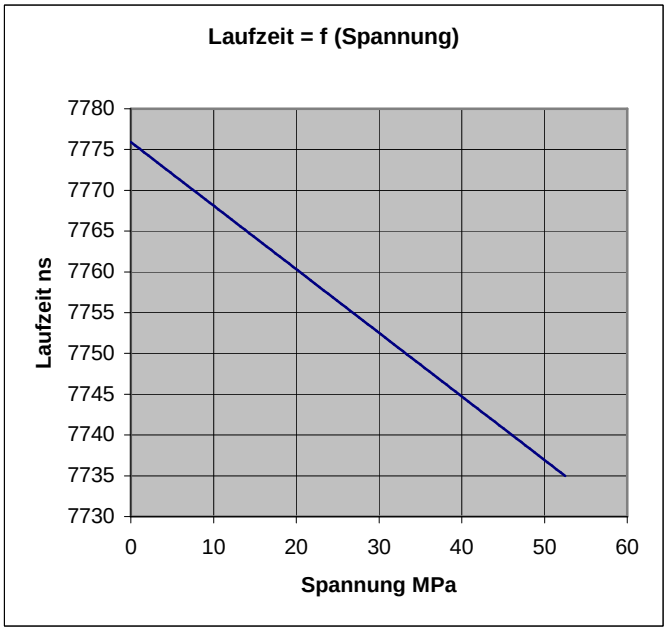

Fig. 6: running time as function of the stress

In the case of use of a measuring body with 25 mm measuring distance a change of stress results in a change of the running time of 10 MPa of approx. 7800 ps..

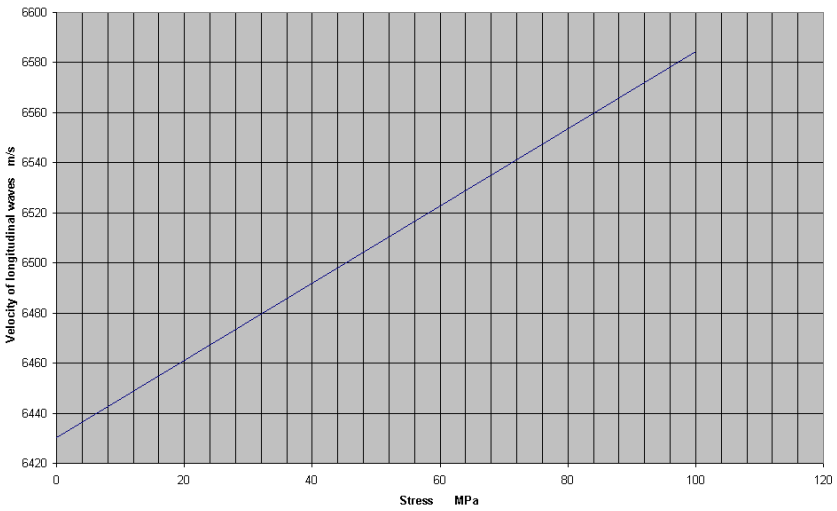

Fig. 7: Dependence of the speed of the longitudinal wave of the tension

For the computation of “sigma measuring “simplified according to the following regulation one proceeded:

The stress σ results from the temperature-compensated running time L_{T1}, the reference on time L_{T0} and that acousto-elastic factor of the measuring body material K_σ too

$$\sigma = (L_{T1} - L_{T0}) / K_\sigma \quad (7)$$

Hereunder applies for L_{T1} the measuring temperature T_1 of the measuring body and for L_{T0} the reference temperature $T_0 = 0$ °C and the reference stress $\sigma = 0$.

Whereby the temperature-compensated running time L_{T0} from the measured running time L_T and the correctur factor= K_T is determined after

$$L_{T0} = L_T * K_T \quad (8)$$

The thermal factor K_T is for a large temperature range a nonlinear function

$$K_T\, f(T) \qquad (9)$$

The thermal factor K_T of the running time determines itself according to (5) with the linear regression for the selected sensors too

$$K_T = 0{,}94684\ ns°C^{-1} \qquad (10)\,.$$

On the sensor test stand the acousto-elastical factor K_σ, intended for the selected metal alloy and sensor thickness, too

$$K_\sigma = 4{,}4585\ Mpa\ ns^{-1}$$

and/or

$$K_\sigma = 4{,}4585\ Nmm^{-2}\ ns^{-1} \qquad (11)$$

to 23°C.

[1] Jäger,F.-M.;The acousto-elastical stress measurement - a new procedure for the geotechnical on-line monitoring
DOI: 10. 13140/2.1.3944.0962
Conference: 8th Internetional Symposium on Field Measurement in GeoMechanics, FMGM 2011, Berlin

Overview stress / strain measurement system IBJ Technology

Remote version sensor and sensor electronics

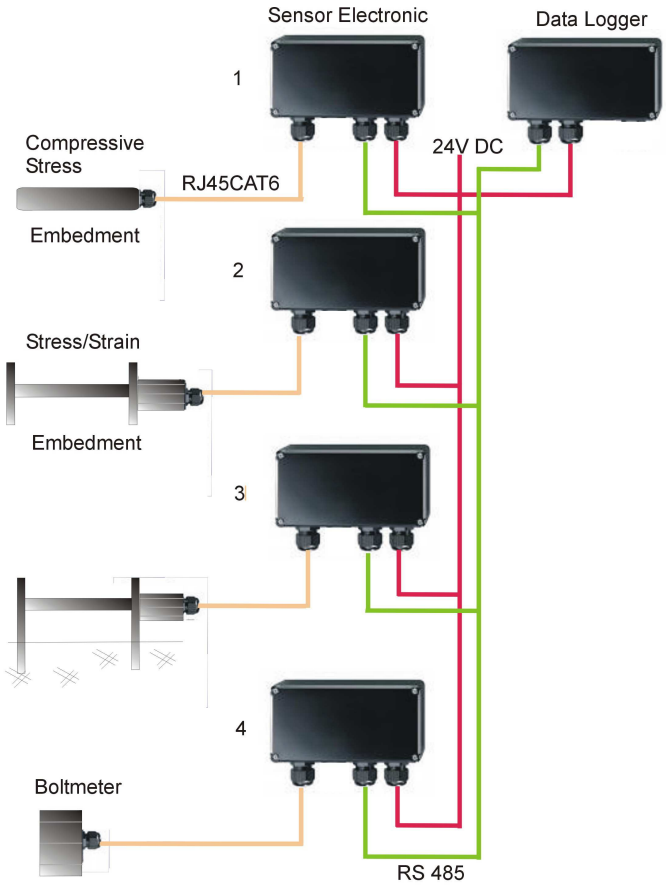

Technical information

The system is based ultrasonic technology. With the highly accurate measurement of the running time (TOF) and the temperature with a sensor. With this technology, all parameters Stress, Strain, Load, Lenght and Elongation can be measured. The resolution is in the ps range. The data are available in real time. The resolution is 55 ps. The standard deviation is 35 ps. All sensors have the same electronics and can be exchanged for the servive. The sensors have fixed cable RJ45 CAT6 PUR (operating temperature -40 ° C to + 80 ° C) with detachable connection for electronics with RS485 bus. Each sensor has its own electronics with 12 bit temperature measurement. Each sensor can be addressed for the RS484 bus. The power supply is 24 V (12 .... 30 V) DC. The temperature range is - 40 ° C to + 80 ° C. A data logger with SD card can be delivered to the system. The recording rate is selected. About a USB interface, the data can be retrieved for further processing. Standard 32 participants on the bus RS485. As an option is an extension to 256 participants possible.

Embeddet compact version

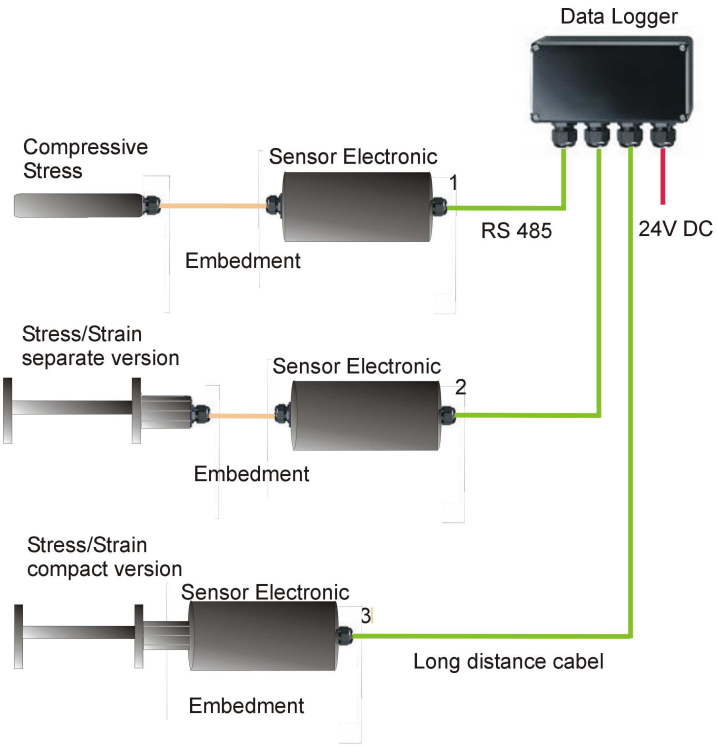

Technical information

The system is based ultrasonic technology. With the highly accurate measurement of the running time (TOF) and the temperature with a sensor. With this technology, all parameters Stress, Strain, Load, Lenght and Elongation can be measured. The resolution is in the ps range. The resolution is 55 ps. The standard deviation is 35 ps. The data are available in real time. All sensors have the same electronics with fixed cable. The length of the cable to the data logger can be up to 1200 m. The supply voltage of 24 V DC is transmitted via BUS cable, The cable has 3 x 2 lines. The electronics can be monitored for cable breaks. The housing for the sensor electronics is a tube of stainless steel, diameter 2 inches. The cables are securely connected and shed. Each sensor has its own electronics with 12 bit temperature measurement.
Each sensor can be addressed for the RS484 bus. The power supply is 24 V (12 .... 30 V) DC.

Multiplexer arangement for a major Projekt

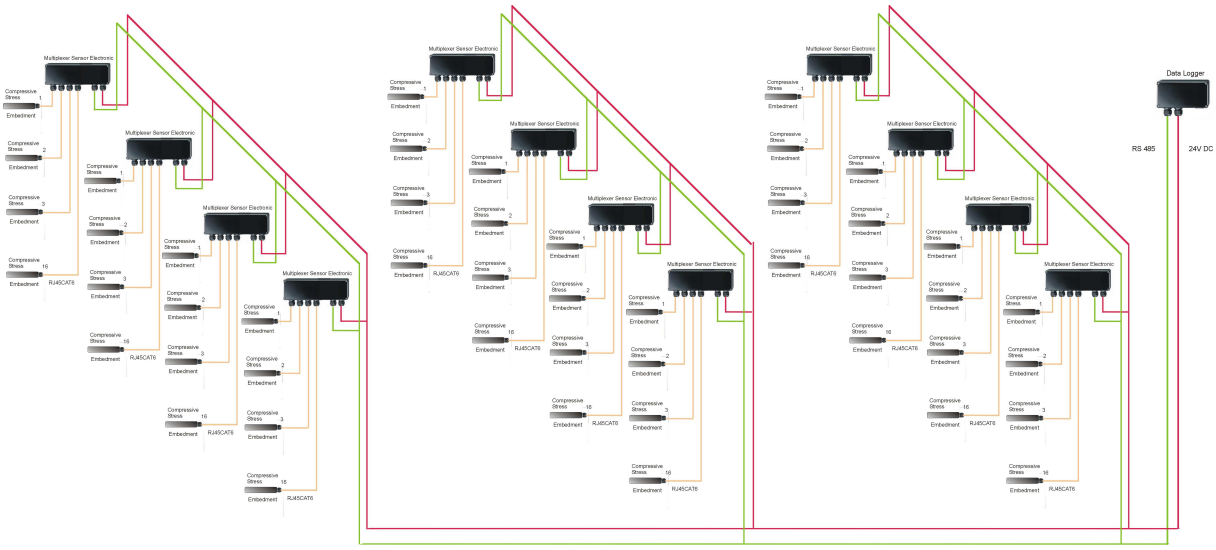

Each sensor has its own temperature measurement.

Each sensor has has a globally unique sensor ID.

Long distance cable (1200 m) between the multiplexer sensor electronics and data logger.

Maximum (default) for big projects: 512

Exemples of the different Instrumentation
Multiplexer with electronics mixed with compact version

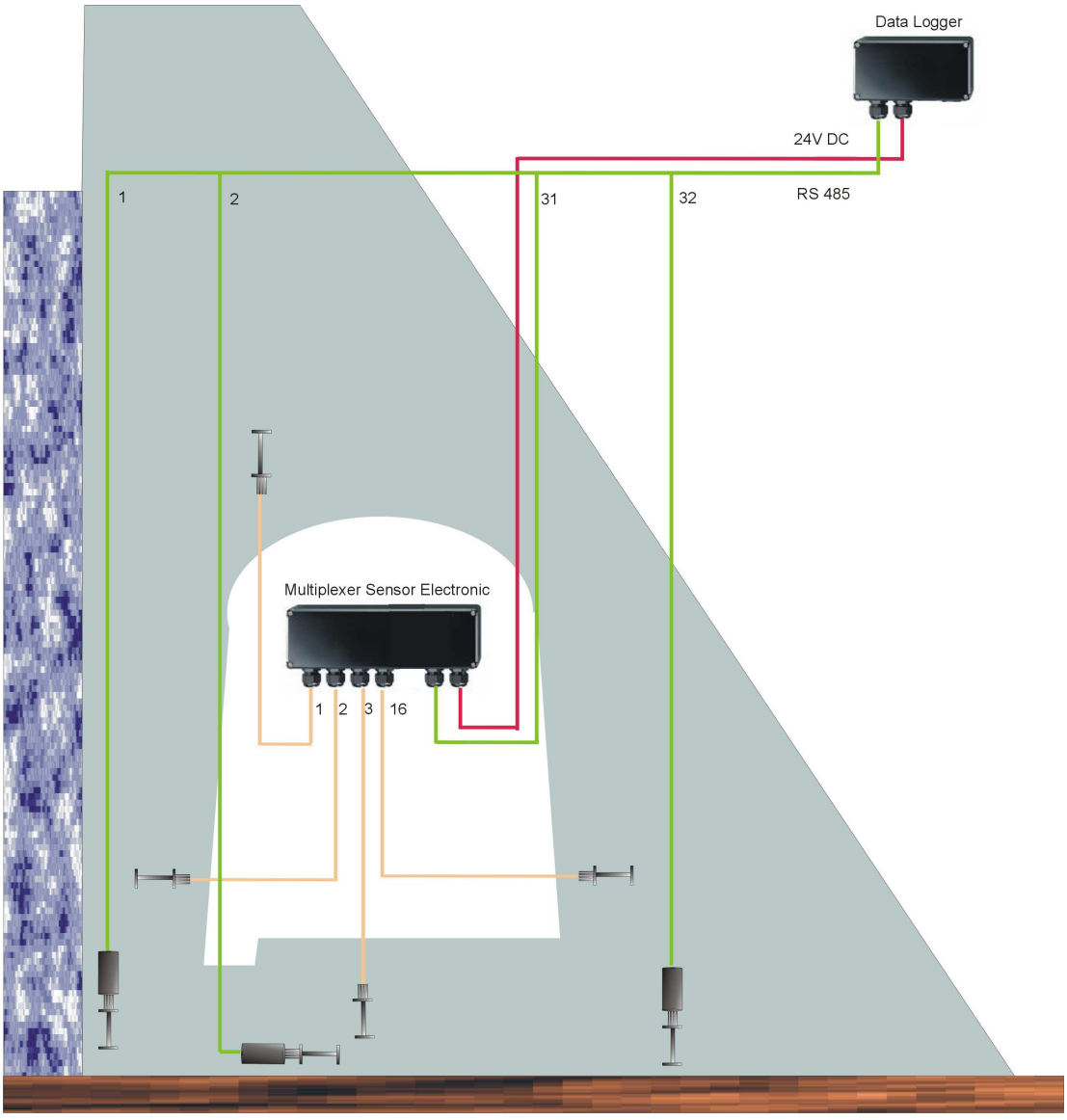

The stress / strain sensors can be installed vertically or horizontally.To measure the brine pressure they are installed vertically.This solution is more cost effective than the use of load cells.

For short distances up to 20 m up to 16 sensors can be supplied with an electronic multiplexer. The switching speed from one sensor to the next sensor is about 2 seconds. This time is necessary because each sensor has its own temperature measurement.
If fast processes are observed, the sensors must be equipped with separate electronics. These electronics have their own address in the RS485 BUS.

Several multiplexer with long distance cables

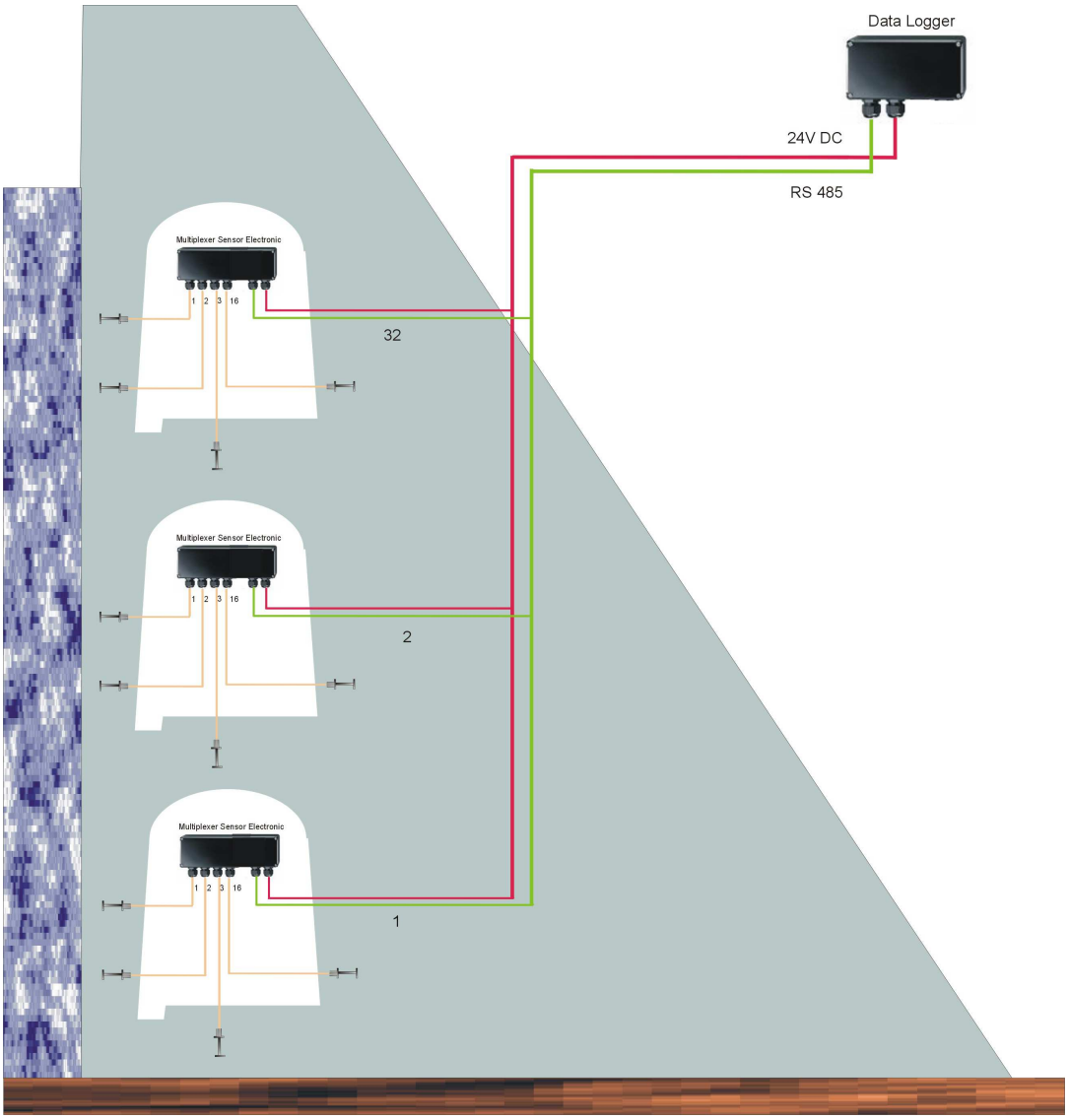

Stress / strain sensors without sensor electronics can be fitted fix cable with a maximum of 20 m. These cables are connected to the multiplexer with sensor electronics. If the sensors are further away than 20 m cable, for example in a long dam to measure at the sole earth pressure, sensor electronics for embedding in concrete is necessary. This sensor electronics is connected to a long distanze cable to the datalogger.
The sensors with sensor electronics can optionally be delivered as separate version with cable, or as a compact version.
The stress / strain sensors can be manufactured with special length. With their bolt diameter of for example 24 mm, these act as an additional part of the steel reinforcement.

Compact version with long distance cables on the RS485

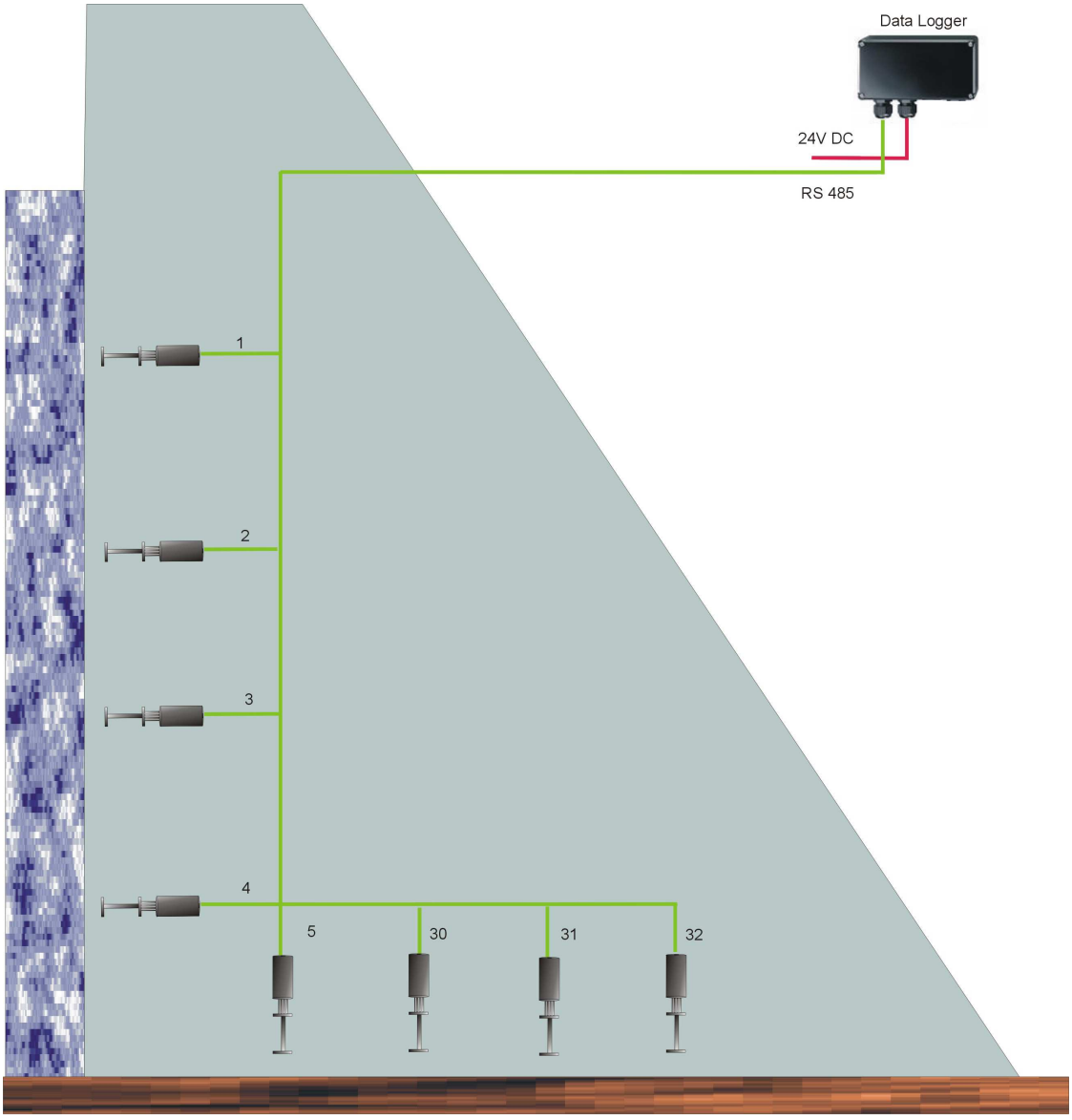

About a USB interface, the data can be retrieved for further processing.
Standard 32 participants on the bus RS485. As an option is an extension to
256 participants possible. The cable lenggth is specified at 1200 m.
Bus nodes are not embeddet. The installation is in a cable duct or on top of the dam.